PBG S.A.

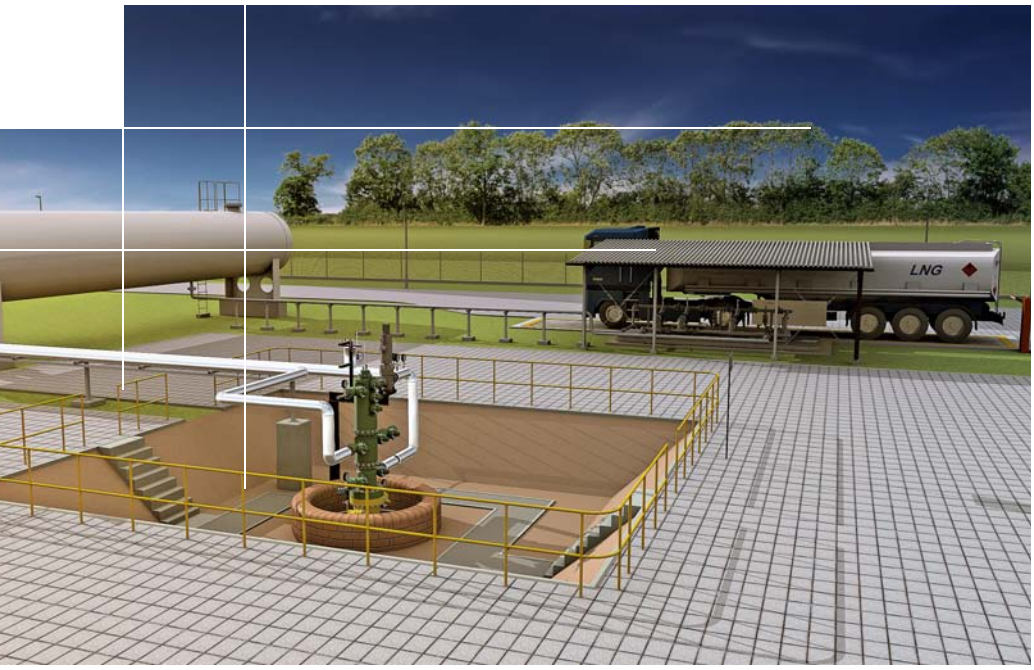

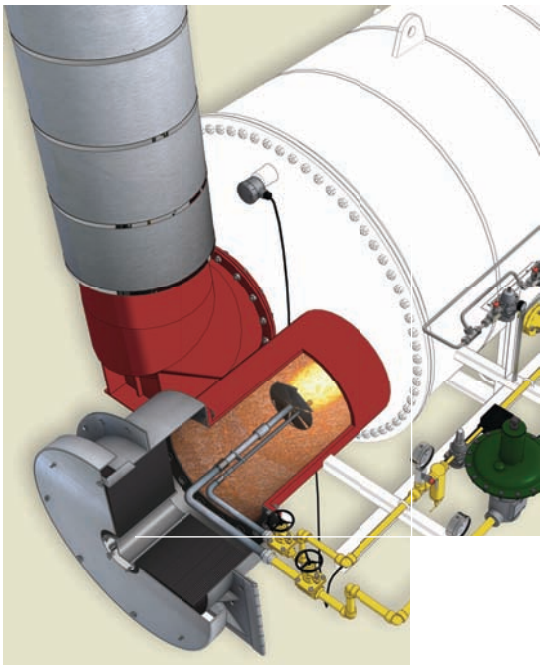

PBG PORTFOLIO: OIL&GAS SECTOR

TRZEK NITROGEN REJECTION AND NATURAL GAS DEHYDRATION PLANT

Revision: April 15, 2011

Project info

Project name	:	Trzek Nitrogen Rejection and Natural Gas Dehydration Plant
Completion	:	2008 - 2009
Role	:	Prime Contractor
Location	:	Poland, Trzek
Design Data	:	Wellhead gas pressure: 300 barg
		Wellhead gas temperature: 24 °C
		Gas flow rate 1,000 ÷ 14,000 Nm^3/h (1 well)
		Sales gas pressure: 5 ÷ 16 barg
		Sales gas gross calorific value 45 ÷ 54 MJ/m^3
		Sales gas water dew point: -5°C @ 55 barg
Client	:	Aurelian Oil & Gas PLC

Scope of Works:

- Pre-engineering including

including:

- Simplified Flow Diagrams
- Block Diagram
- Process Flow Diagram
- Heat & Material Balance
- Piping & Instrumentation Diagram
- Conceptual Plot Plan

Inlet Gas Composition:

- Methane [CH_4]: 85.81 %mol.
- Ethane [C_2H_6]: 0.295 %mol.
- Propane [C_3H_8]: 0.0098 %mol.
- n-Butane+ [n-C_4H_{10}]: 0.0 %mol.
- n-Pentane [n-C_5H_{12}]: 0.0 %mol.
- n-Hexanes [n-C_6H_{14}]: 0.0027 %mol
- n-Heptanes [n-C_7H_{16}]: 0.0067 %mol.
- n-Octane [n-C_8H_{18}]: 0.0027 %mol.
- Carbon Dioxide [CO_2]: 1.001 %mol.
- Nitrogen [N_2]: 12.77 %mol.
- Hydrogen [H_2]: 0.001 %mol.

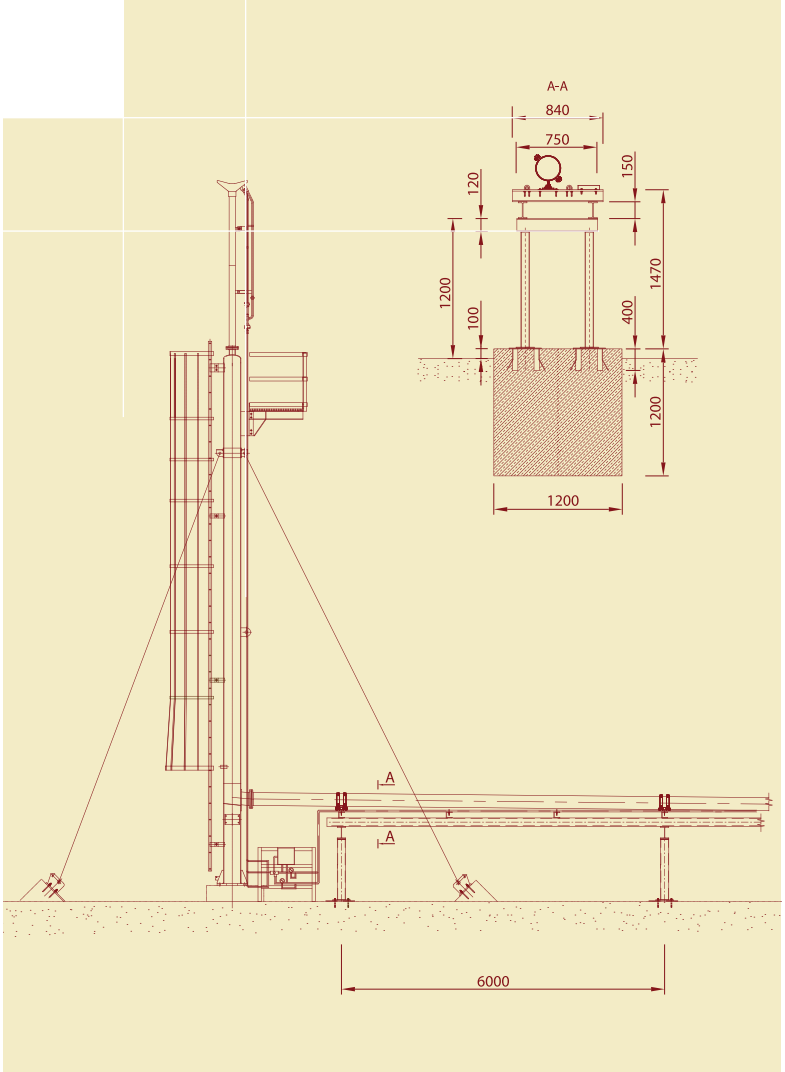

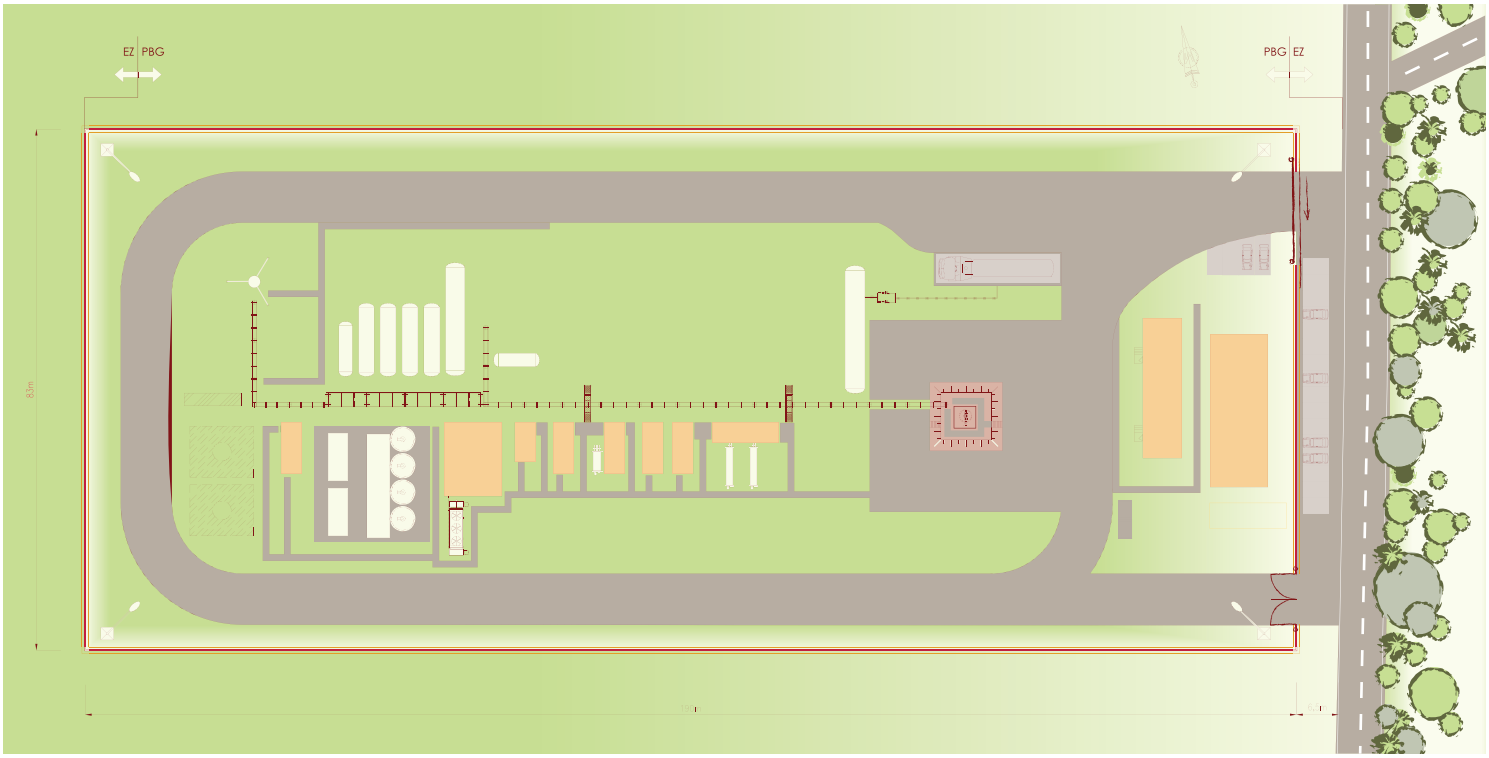

1 Mole Sieve Nitrogen Gas Rejection Unit, Trzek NRU

2 Flare General Arrangement Drawing, Trzek NRU

3 Plot Plan of Central Facility Plant, Trzek NRU

COVER PAGE 1 Wellhead installation, Trzek NRU
2 In-direc Line Heater, Trzek NRU
3 3D Visualization, Trzek NRU

CURRENT PAGE 1 Project location, World Map
2 Wellhead installation, Trzek NRU
3 Block Diagram, Trzek NRU

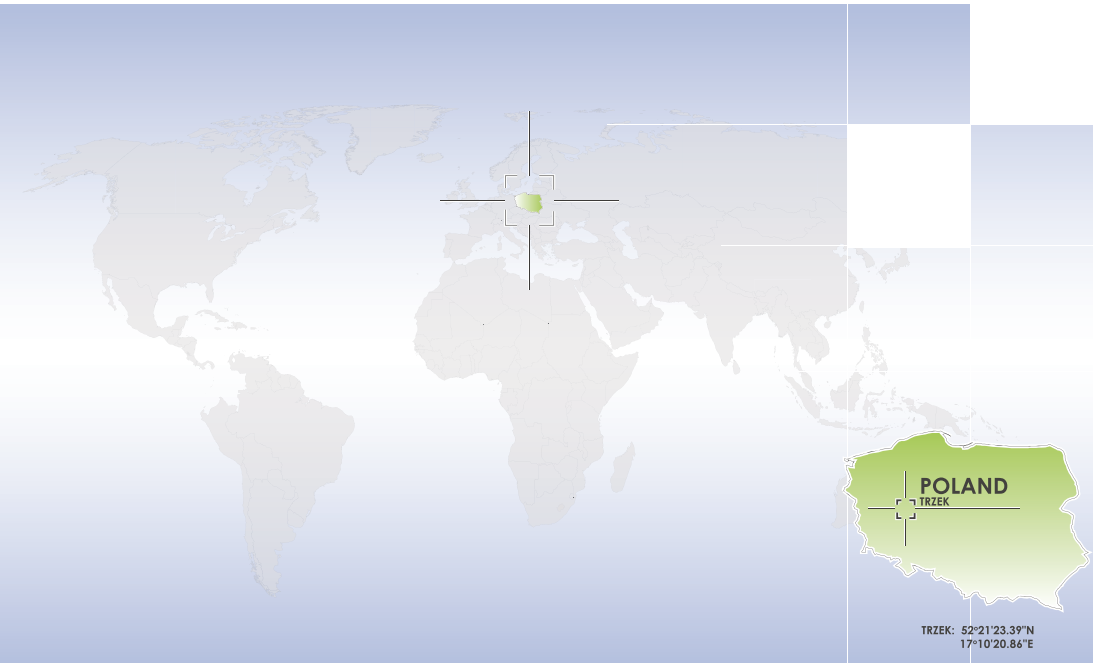

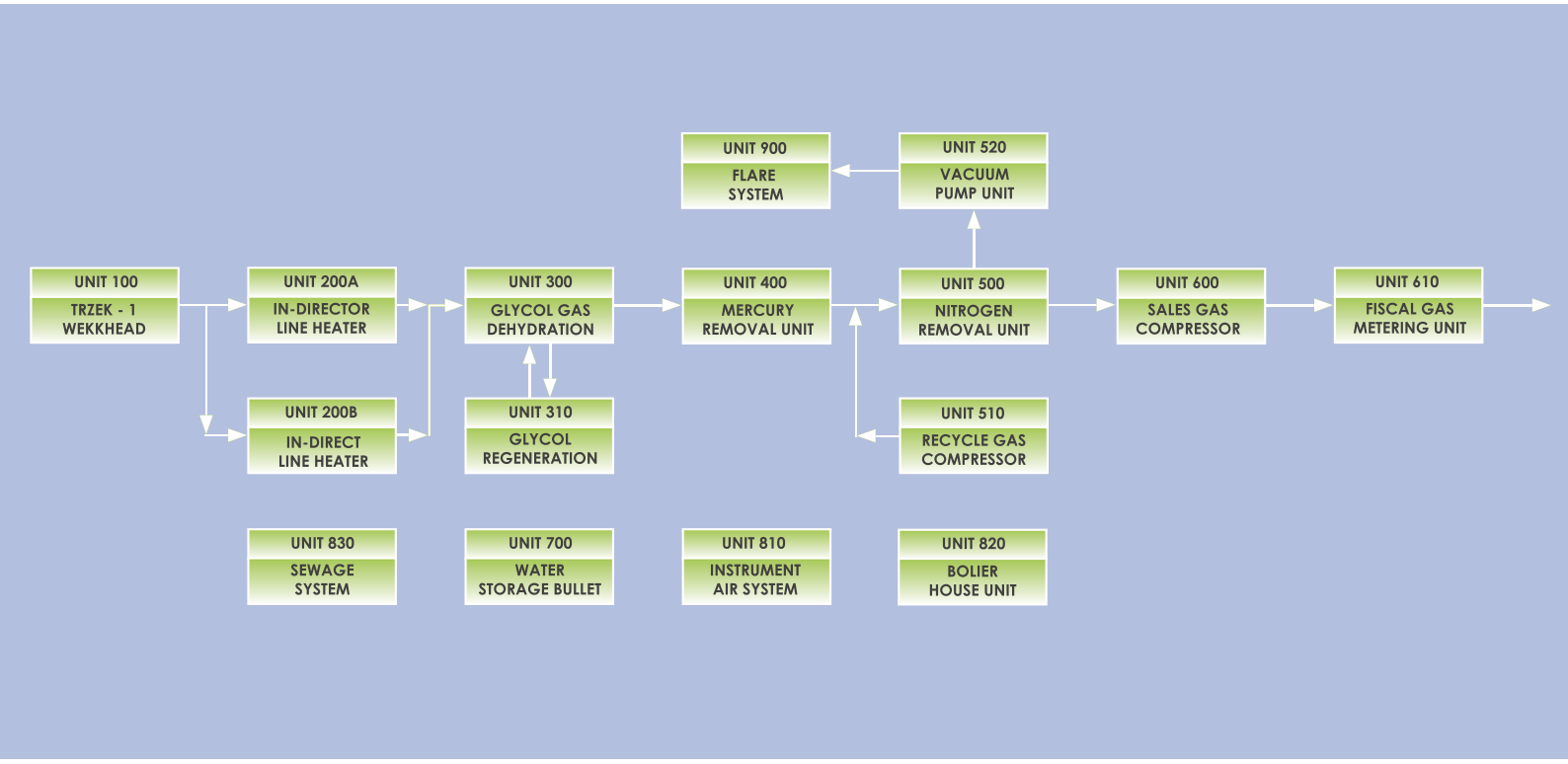

PBG S.A.
ul. Skorzewska 35
Wysogotowo, Poznan
62-081 Przezmierowo
Poland

phone: +48 61 66 51 700
fax: +48 61 66 51 701
www.pbgsa.com
email: polska@pbg-sa.pl